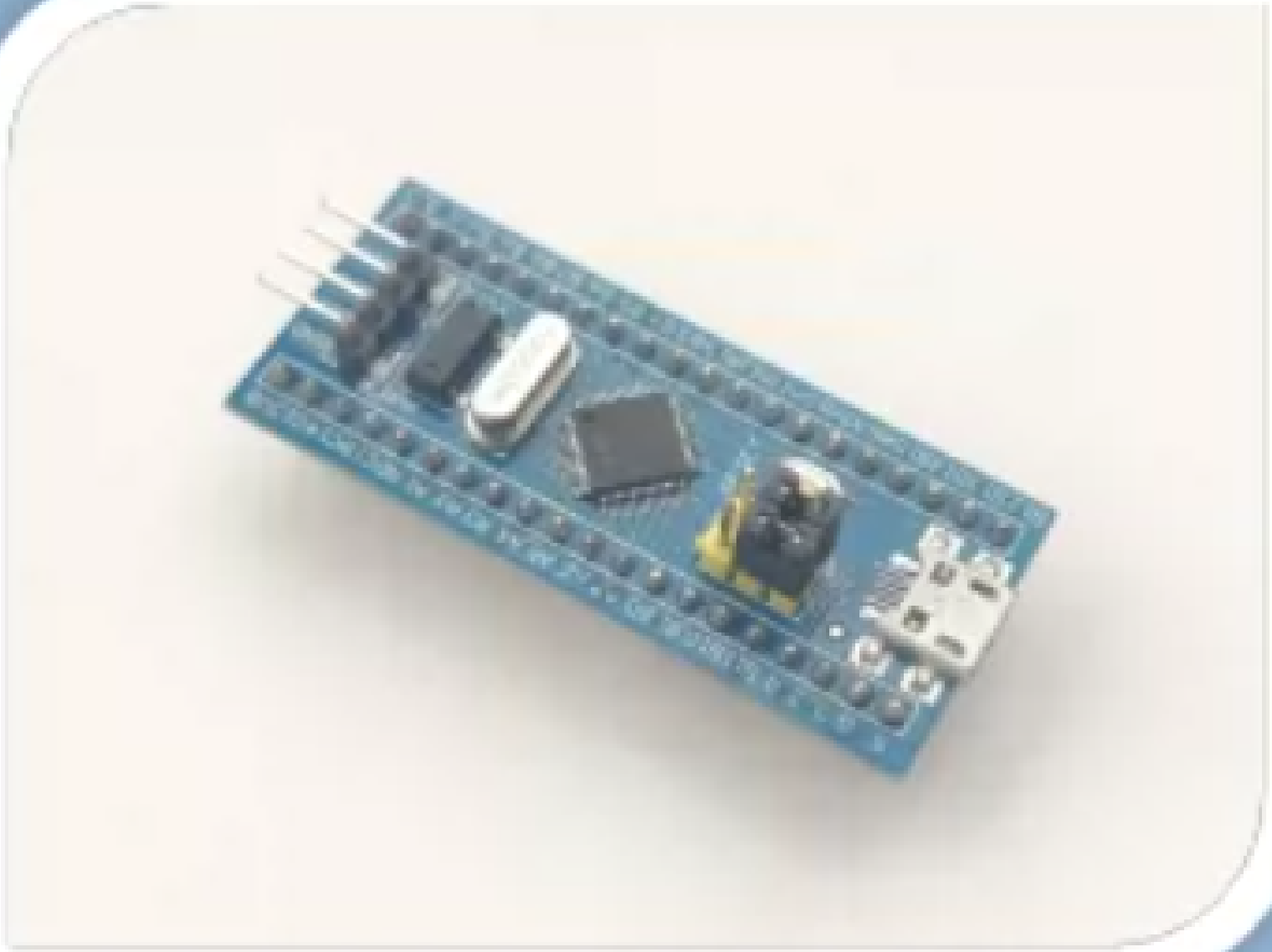

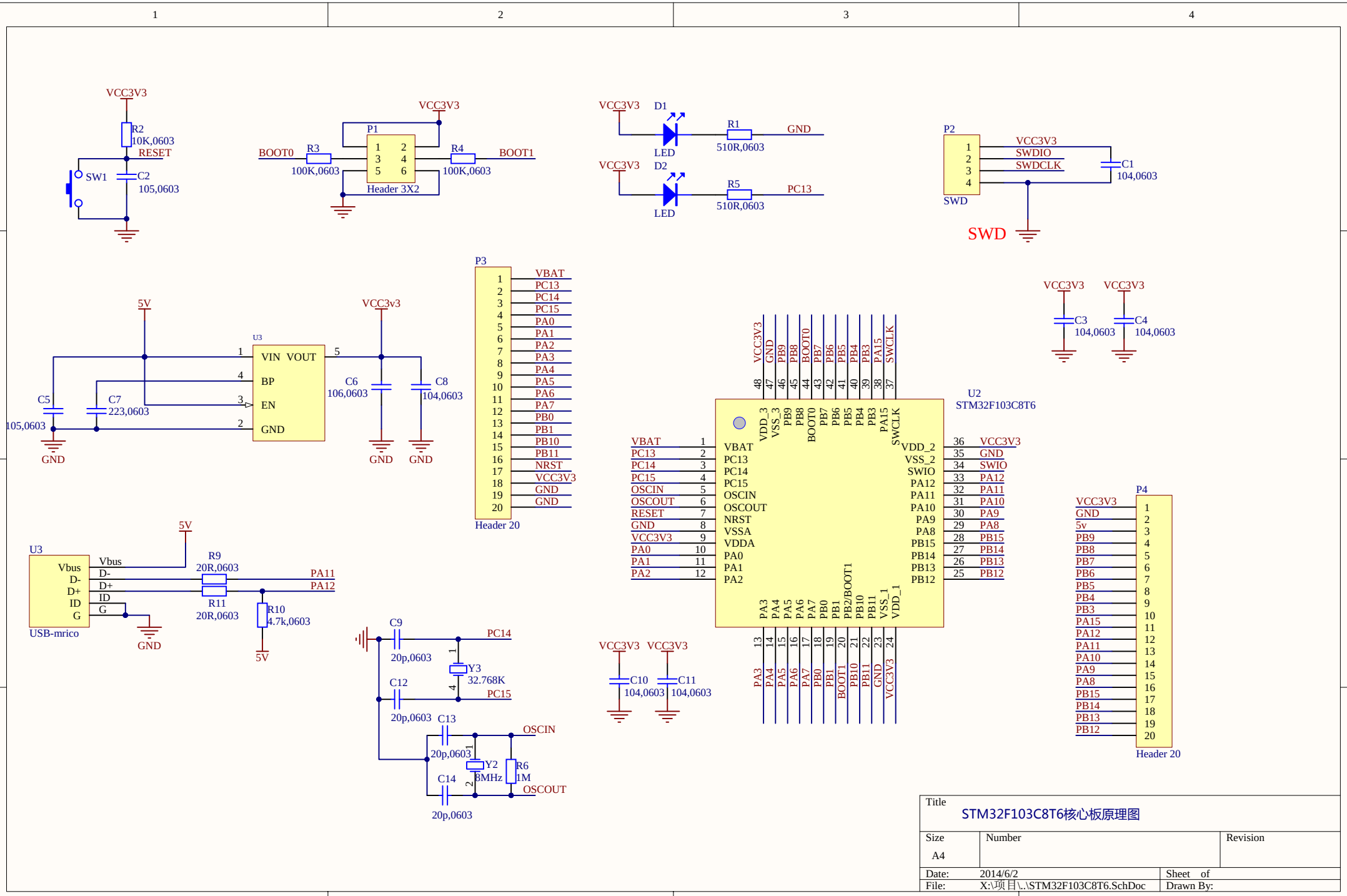

Title		
STM32F103C8T6核心板原理图		
Size A4	Number	Revision
Date: 2014/6/2		Sheet of
File: X:\项目\..\STM32F103C8T6.SchDoc		Drawn By: